JET CHISEL JEX-20 ASSEMBLY AND PARTS LIST

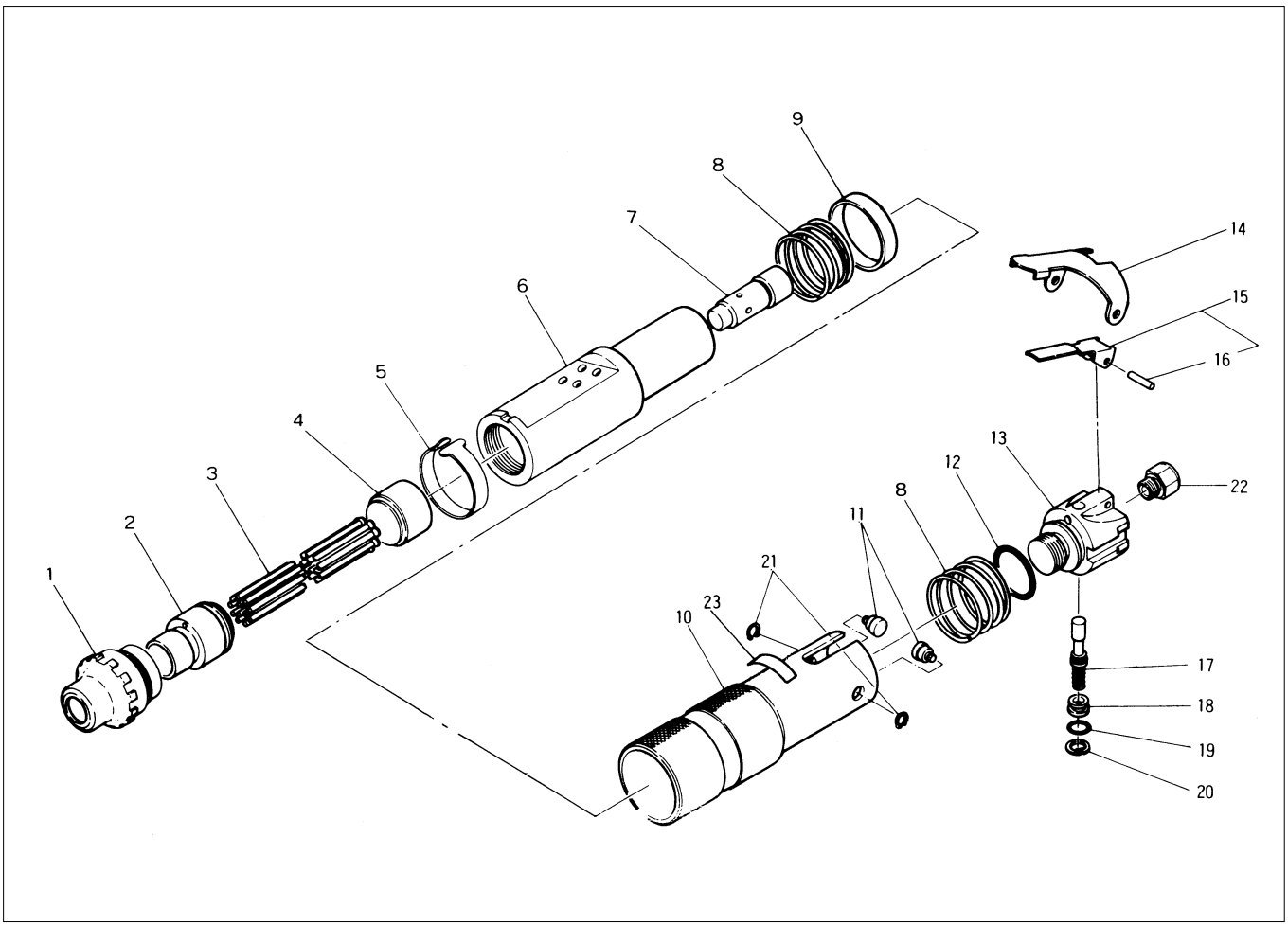

The parts numbers with ( ) are included in the Ass'y parts written above them.

No.	Part No.	Part Name	Q'ty	Price
1	TP14689	Lock Ring	1	
2	TP00337	Needle Supporter ϕ3	1	
3	——	Needle ϕ3×180 mm	12	
4	TP00336	Throttle Anvil	1	
5	TP14593	Lock Band	1	
6	TA99176	Cylinder Ass'y	1 set	
7	TP00332	Piston	1	
8	TP14594	Spring 2.2×40.5×34	2	
9	TP14595	Stopper	1	
10	TB03110	Cover Ass'y	1 set	
23	(TQ02207)	Warning Label CE Mark	1	
11	TP14599	Lever Pin	2	
12	LP12795	O-Ring	1	
13	TP15229	Valve Body	1	
14	TP14597	Throttle Lever	1	

No.	Part No.	Part Name	Q'ty	Price
15	TA98982	Throttle Lever Ass'y	1 set	
16	(TP01921)	Spring Pin ϕ3×18	1	
17	TA98983	Throttle Valve Ass'y	1 set	
18	TP14601	Valve Cap	1	
19	TP14604	O-Ring	1	
20	TP03695	Internal Retaining Ring C-12	1	
21	TP02853	Retaining Ring E-4	2	
22	TQ02349	Bushing M16×PT3/8	1	

ACCESSORIES

	——	Needle ϕ3×180 mm	12	
	TQ02350	Bushing PT3/8×NPT3/8	1	
	TQ03262	Hose Nipple PT3/8×3/8	1	
	TP16451	Instruction Manual	1	