COMPRESSOR

LINEAR

AC 0102

Compressor LOW pressure

MOTOR FREE PISTON SYSTEM

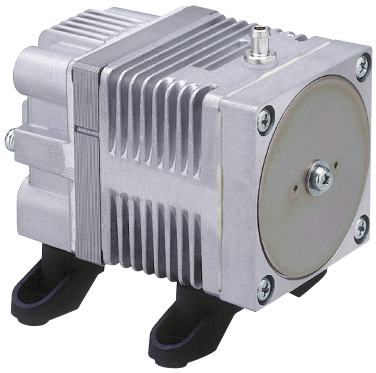

Airflow & Power Consumption

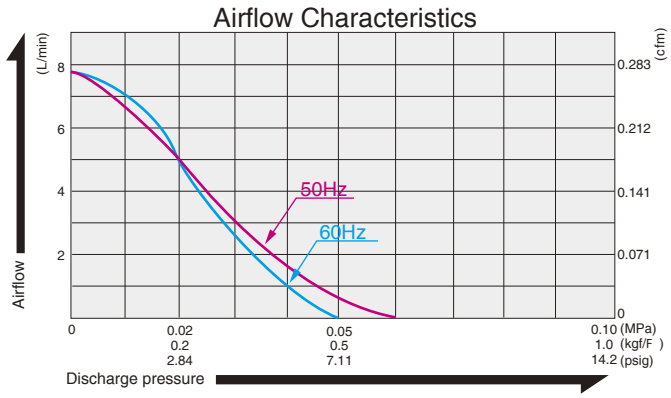

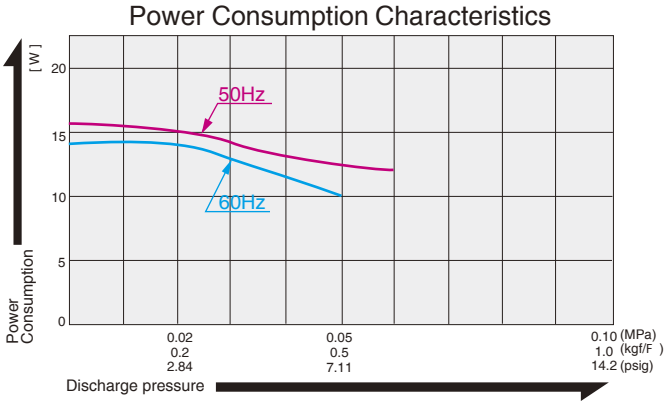

Specifications

	(SI)	(EURO)	(U.S.A.)
Rated Pressure	0.02 MPa {0.2 kgf/F }	0.2 bar	2.84 psig
Rated Airflow	5 L/min		0.177 cfm
Rated Voltage	115 V AC or 230 V AC		
Maximum Pressure	0.04 MPa {0.4 kgf/F }	0.4 bar	5.69 psig
Power Consumption	14 W or 15 W		
Rated Frequency	60 Hz or 50 Hz		
Life Expectancy	3,000 hours		
Outlet	6 mm O.D. hose nipple		
Duty Cycle	Continuous		
Coil Insulation Class	E or its equivalent (JETL) and B for UL		
Mounting Dimensions	48 (L) x 62 (W) mm		1-7/8"(L) x 2-7/16"(W)
Gross Weight	0.7 kg		1.54 Lbs.
Leadwire Length	200 mm		7-7/8"

Please read the page of "How to Use This Catalog" first for correct use of compressors and pumps.

Application Examples

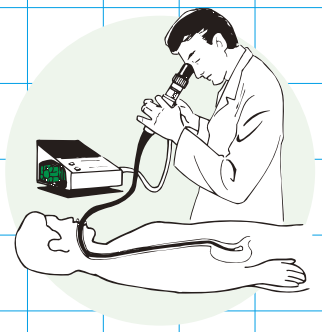

Endoscope

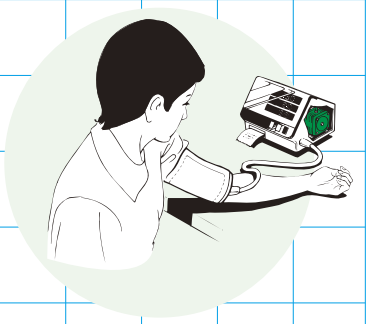

Blood Pressure Tester
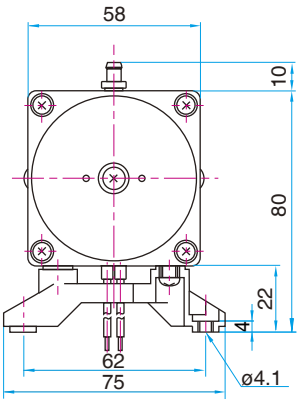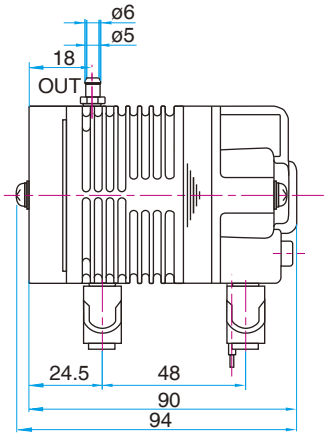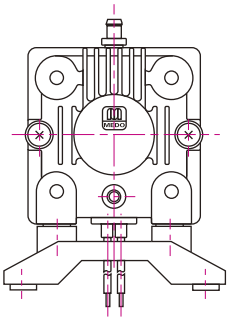
Sketch Drawing and Mounting Dimensions Diagram (mm)